R-PCN18-27

CORDLESS NAILER FOR CONCRETE AND STEEL
18 V Li-Ion

The new R-PCN18-27 battery-powered nailer for concrete and steel ensures increased efficiency in installation, electrical work and the assembly of drywall systems.







FEATURES AND BENEFITS

- Tool energy increased to 90 J to enable driving nails up to 27mm long into the hardest materials.
- Lithium-ion battery provides twice the performance – 900 fasteners per charge and a 50-minute charge time.
- Ergonomically designed grip position for better balance and comfort
- Sequential operation ensures safe operation.
- Designed for increased durability and increased airflow efficiency through the air filter zone.
- Comfortable, reliable, and accurate fastening with keyless nail depth adjustment for greater precision and ease of use.

BASE MATERIALS

- Concrete
- Cracked concrete
- Reainforced concrete
- Steel

R-PCN18-27

CORDLESS NAILER FOR CONCRETE AND STEEL
18 V LI-ION

The R-PCN18-27 battery nailer for concrete and steel is an excellent cordless alternative for installation applications – no power cables, gas canisters, or compressed air hoses required. It increases the efficiency of installation, electrical, and drywall work. Each fastening is completed in under 1 second. Combined with a battery capacity of 900 fastenings and a battery charge time of only 50 minutes, the results are significant gains in work efficiency and installation repeatability.

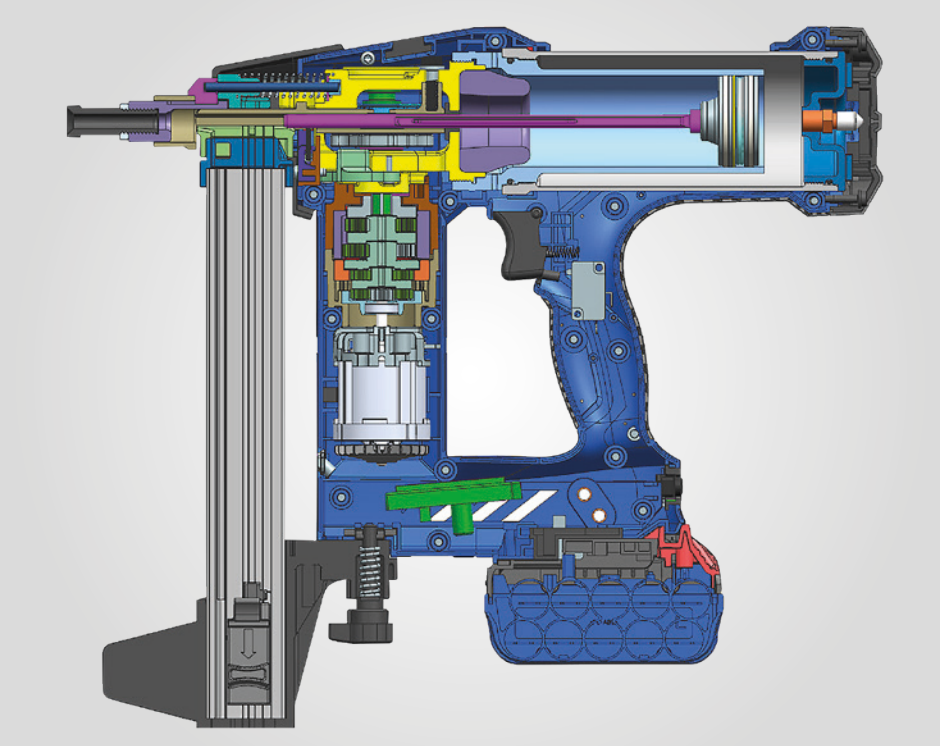

APPLICATIONS

- Installation of cable trays and channels
- Installation of drywall systems
- Installation of cable holders and conduits

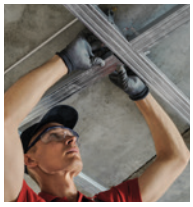




PRODUCT INFORMATION

Index	Voltage	Impact energy	Dimensions	Nails range	Nails type	Number of mounts per charge	Net weight [kg]	Magazine capacity	Battery charging time
	[V]	[J]	[mm]	[mm]				[nails]	[min]
R-PCN18-27	18	90	420x120x320	15-27	Concrete/ steel	900	3,7	33	50

OFFER

Index	Powertool	Battery R-BAT-185001 [5,0 Ah]	Charger 6.5A R-CHR-186502	Transport case	User manual	EAN
						
R-PCN18-27-XL	1	-	-	1	1	5906675645841
R-PCN18-27-XL1	1	1	1	1	1	5906675648781
R-PCN18-27-XL2	1	2	1	1	1	5906675648828

RELATED PRODUCTS

MOUNTING ACCESSORIES

Nails for concrete
R-KNC



Plastic-coated nails for concrete

Nails for steel
R-KSC



Plastic-coated nails for steel

Mounting tape
R-MTC-10M



Perforated steel tape for fastening and hanging

Mounting tape
R-MTT-10M



Textile tape for fastening and hanging

Plastic holder
R-SC40-PCS



Single plastic holder for floor-mounted installation conduits, reinforced with PA

Cable holder
R-SC40-TCS



Plastic holder for flush-mounted flat cables

Single metal clip
R-SC40-MCS



Single, galvanized cable holder for use in electrical installations

Double metal clip
R-SC40-MCD



Double, galvanized cable holder for use in electrical installations

POWER

Charger 18 V
R-CHR-186502



6.5A fast charger with electronic charging process stabilization and active cooling

Charger 18 V
R-CHR-181501



1,5 A Charger with electronic charging process stabilization system

Battery 18 V
R-BAT-188001



RawlBATTERY
Li-Ion 18 V / 8,0 Ah

Battery 18 V
R-BAT-185001



RawlBATTERY
Li-Ion 18 V / 5,0 Ah.

Battery 18 V
R-BAT-182001



RawlBATTERY
Li-Ion 18 V / 2,0 Ah